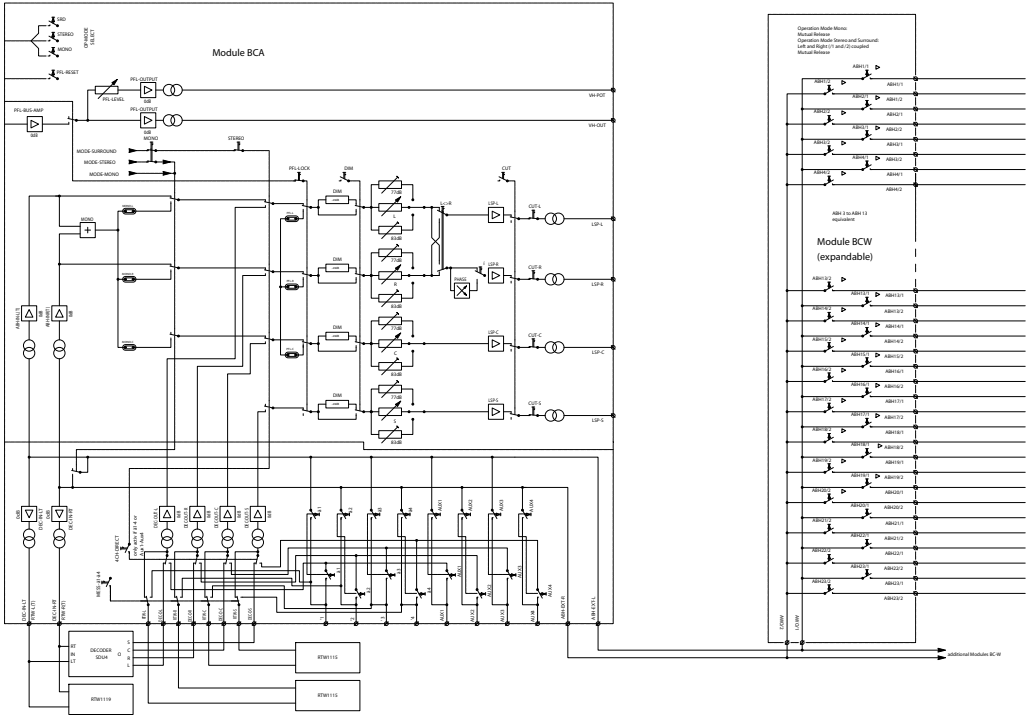

Module BCA
SRD
STEREO
MONO
OPMODE SELECT
RESET
PFL-OUTPUT
PFL-LEVEL
PFL-OUTPUT
PFL-BUS-AMP
MONO
STEREO
MODE-SURROUND
MODE-STEREO
MODE-MONO
PFL-LOCK
DIM
CUT
VH-POT
VH-OUT
LSP-L
LSP-R
LSP-C
LSP-S
PHASE
DC-PH-PT
PFL-PH-PT
DC-LN-PT
PFL-LN-PT
DECODER SDU14
RTM1115
RTM1119
Operation Mode Mono:
Mutall Release
Operation Mode Stereo and Surround:
Left and Right (1) and (2) coupled
Mutall Release
ABH 3 to ABH 13 equivalent
Module BCW
(expandable)
F.DIV
I.D.BW
additional Modules BC-W