Logik-Functions / Operation Mode Select
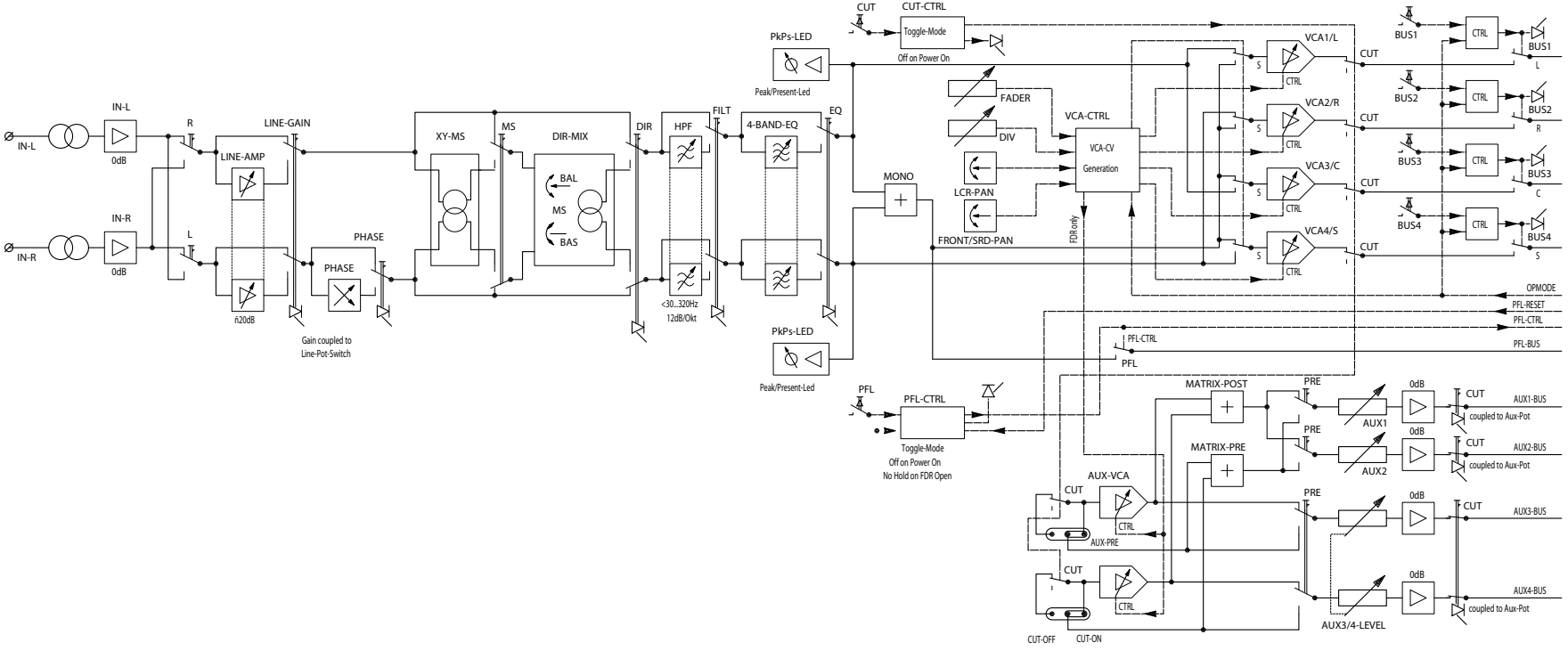
Op Mode	Panoramic Section	Buss Selection
Mono	inaktive	single, independend
Stereo	Stereo-Balance, 0dB @ center	1 coupled to 2 and 3 coupled to 4
Surround	Surround-Pan with LCR-Pan, Divergence and Front-/Surround-Pan	1 to 4 coupled